# REMOVAL

**1. DISCONNECT BATTERY NEGATIVE TERMINAL**

**2. REMOVE ENGINE UNDER COVER RH**

**3. REMOVE FAN AND GENERATOR V BELT**

HINT:
(See page EM-5)

**4. REMOVE GENERATOR ASSEMBLY**

(a) Remove the terminal cap No. 2.
(b) Remove the nut [B], then remove the generator wire.
(c) Disconnect the generator connector [C].
(d) Remove the wire harness clamp [D].
(e) Disconnect the A/C connector [E].

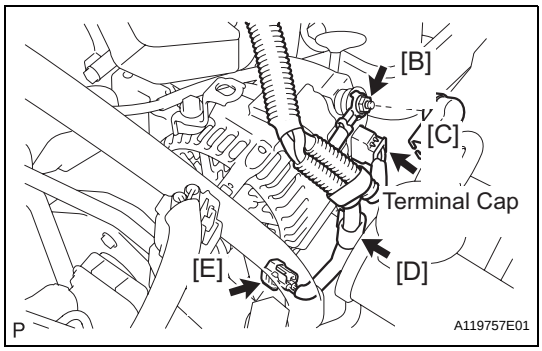


(f) Remove the 2 bolts, then remove the generator.

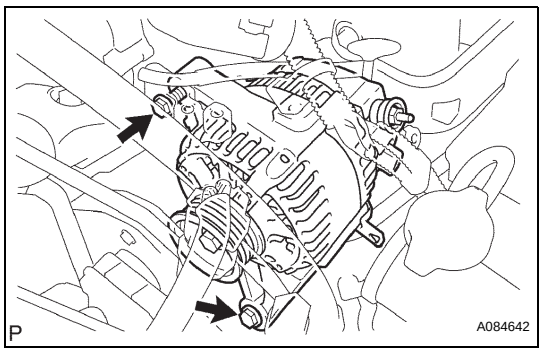

# DISASSEMBLY

**1. REMOVE GENERATOR PULLEY**
**SST 09820-63010 (09820-06010, 09820-06020)**
HINT:

| | |
|---|---|
| SST 1-A and B | 09820-06010 |
| SST 2 | 09820-06020 |

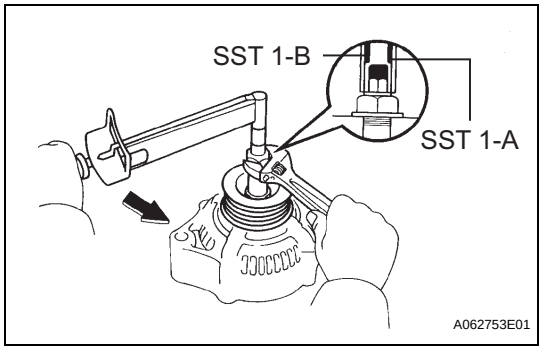


(a) Hold SST 1-A with a torque wrench, then tighten SST 1-B counterclockwise to the specified torque.
**Torque: 39 N*m (400 kgf*cm, 29 ft.*lbf)**
**NOTICE:**
**Securely fix SST on the generator rotor shaft.**

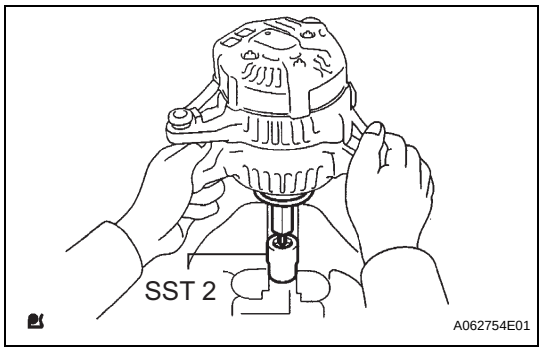


(b) Clamp SST 2 in a vise.
(c) Insert SST 1-A and B into SST 2, then attach the pulley nut to SST 2.

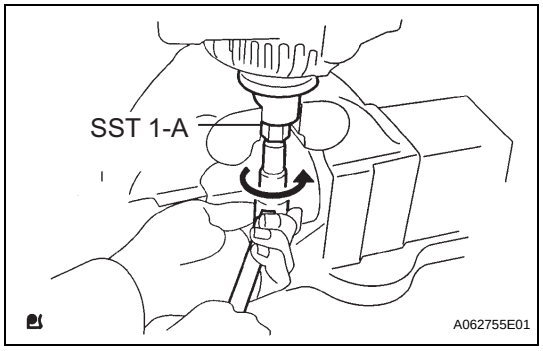


(d) To loosen the pulley nut, turn SST 1-A in the direction shown in the illustration.
**NOTICE:**
**To prevent damage to the rotor shaft, do not loosen the pulley nut more than a half turn.**
(e) Remove the generator from SST 2.

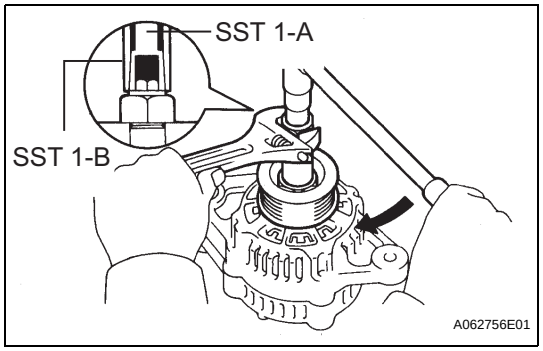


(f) Turn SST 1-B, then remove SST 1-A and B.
(g) Remove the pulley nut, then remove the generator pulley.

**2. REMOVE GENERATOR BRUSH HOLDER ASSEMBLY**
(a) Remove the nut, then remove the terminal insulator.
(b) Remove the screw and nut, then remove the terminal plate.
(c) Remove the 2 nuts, then remove the rear end cover.
(d) Remove the generator brush cover from the generator brush holder.
(e) Remove the 2 screws, then remove the generator brush holder.
(f) Remove the generator plate seal from the generator rectifier end frame.